Inverters:

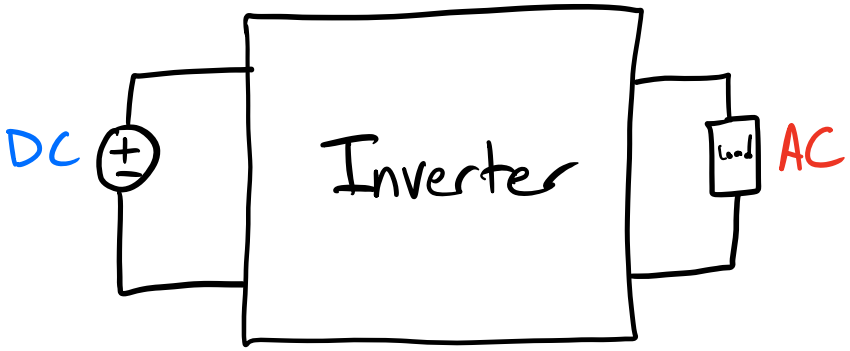

Single-Phase Half-Bridge Inverter:

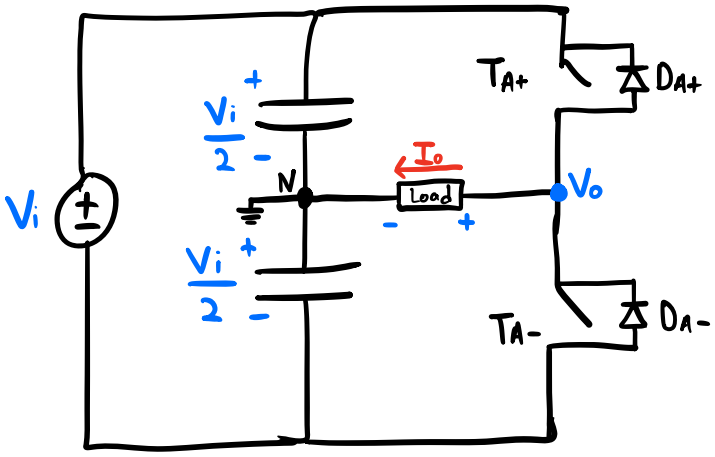

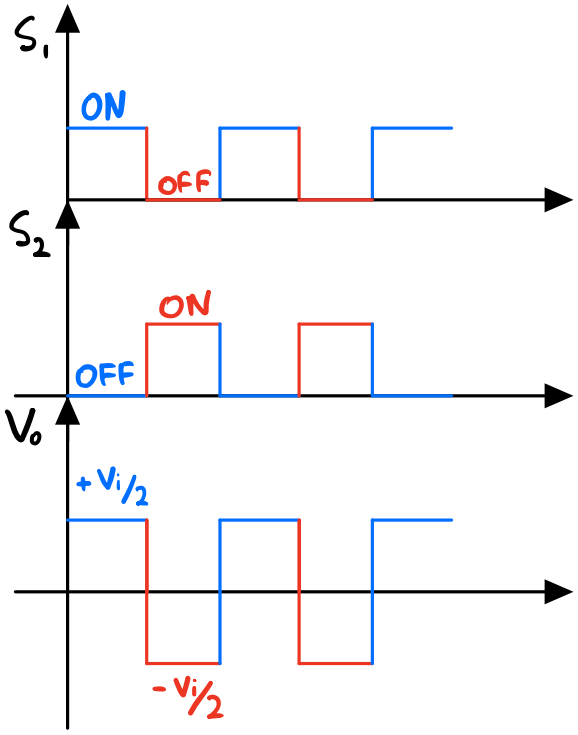

S_1	S_2	V_o
0	0	depends on I_o
0	1	$-V_i/2$
1	0	$+V_i/2$
1	1	"Shoot-through"

PWM Switching (Inverter):

V_{tri} sets the switching frequency f_s

$V_{control}$ sets the modulating frequency f_1. Desired fundamental frequency of the inverter sinusoidal output voltage

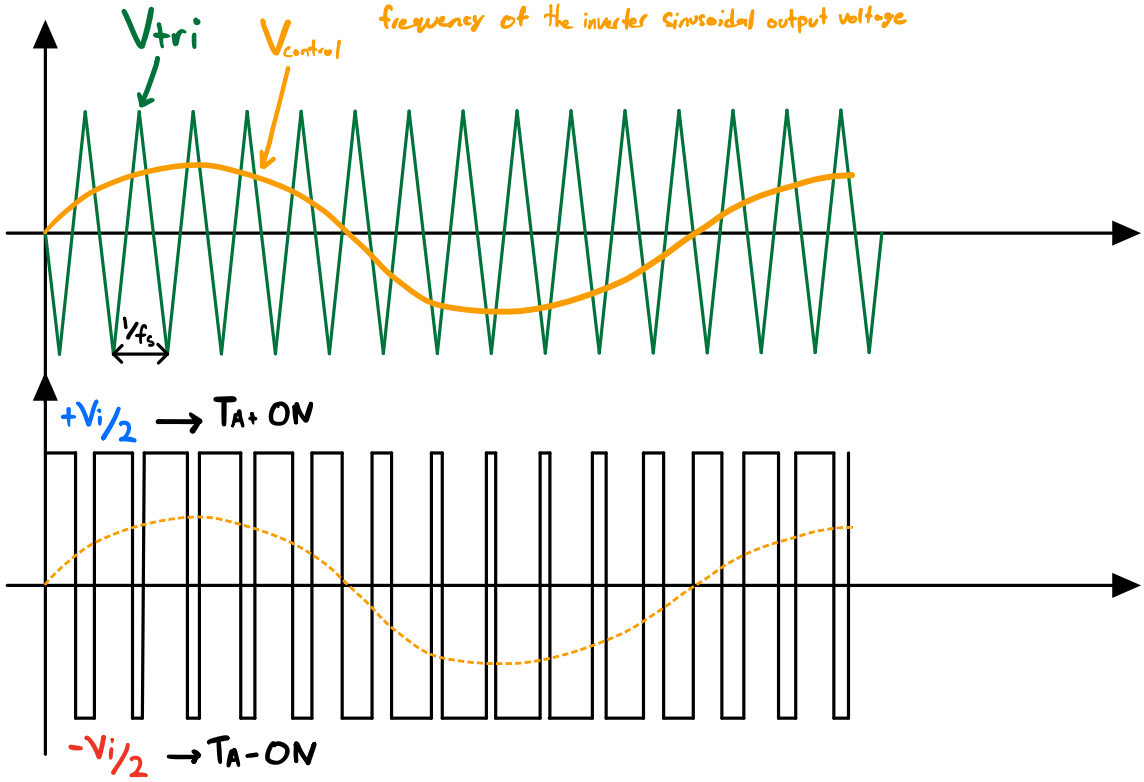

Modulation Index:

$$m_a = \frac{\hat{V}_{control}}{\hat{V}_{tri}}$$

Frequency Modulation Ratio:

$$m_f = \frac{f_s}{f_1}$$

Average Output Voltage:

$$\langle V_o \rangle = \frac{\hat{V}_{control}}{\hat{V}_{tri}} \cdot \frac{V_i}{2} \quad ; \quad \hat{V}_{control} \leq \hat{V}_{tri}$$
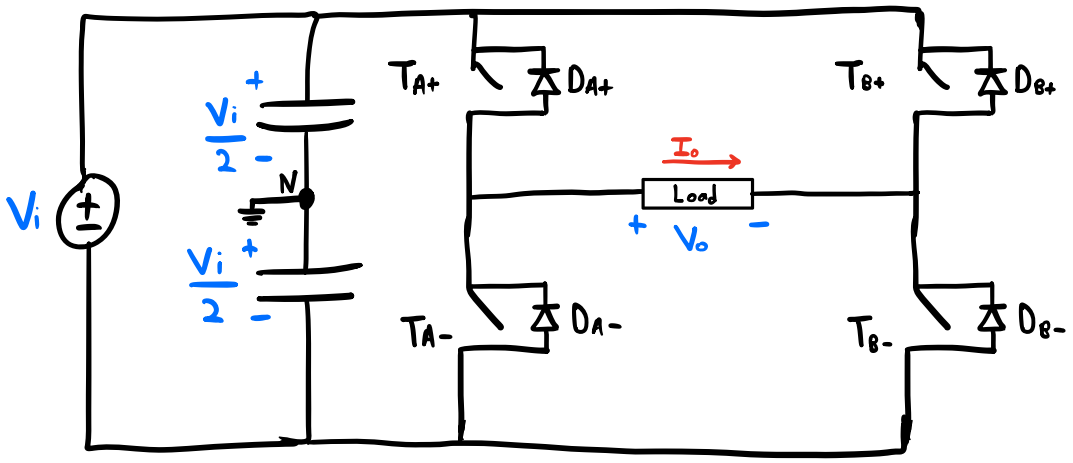
Single Phase Full Bridge Inverter: